ContrasTech

Mars Series Area Scan Cameras

GigE VISION

Mars5000A-23gm/gc-NP

- 5MP @23 fps
- Adopts GigE interface and max. transmission distance of 100 meters without relay
- Compatible with GigE Vision Protocol, GenICam Standard, and the third-party software based on these protocol and standard
- Support Windows、Linux
- 64 MB local memory for burst transmission and retransmission

Applied range • Defect Detection • Surface Patch Detection • Visual Positioning • Size Measuring • QR Code Reading • VR/AR • Logistics

Camera	Mars5000A-23gm/gc-NP
Resolution [H*V]	2592 x 1944
Sensor	ON Semiconductor AR0521
Sensor Size	1/2.5”
Sensor Tecchnology	Rolling, CMOS
Pixel Size [μm]	2.2 x 2.2
Frame Rate [fps]	23
Data Bit	12bit
Exposure Time	21.5μs~1s
Dynamic Range	60dB
Mono/Color	Mono/Color
Image Format	Monochrome：Mono8/10/10Packed/12/12Packed Color：Mono8,BayerRG8/10/10Packed/12/12Packed, BayerGB8/10/10Packed/12/12Packed,RGB8Packed, YUV422Packed
Interface	GigE
Synchronization	Via hardware trigger、software trigger or free run mode
Programmable Control [ISP]	Image resolution、RGB Gain、Exposure time、Contrast ratio、Gamma form、Image rollovers、Raw、 LUT、Black level correction
Housing Size [l*w*h]	29.0 × 29.0 × 29.0 mm (60g)
Operating Temperature	-30~80 ° C (Storage), -30~50° C (Working)
Lenses Mount	C-Mount
Digital I/O	Opto-isolated input x 1, opto-isolated output x 1, and bi-directional custom non-isolated I/O x 1
Power Input	DC 6-24V
Power Consumption	12V @ ≈ 2.8W
Driver	Mars Series Camera Software Suite (iCentral) or 3rd party GigE Vision Software
Operating System	Windows,Linux
Conformity	GigE Vision,GenICam

Spectral Response

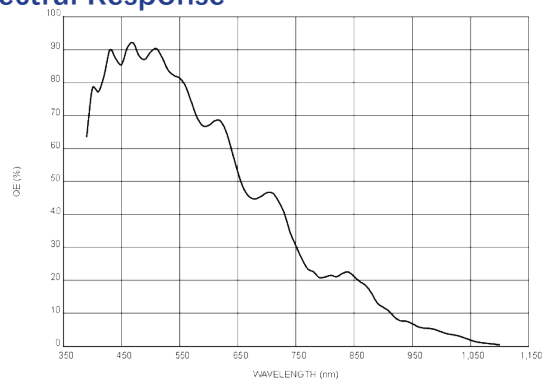

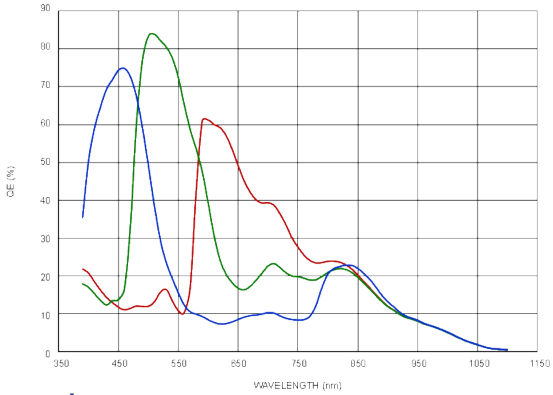

Dimensions

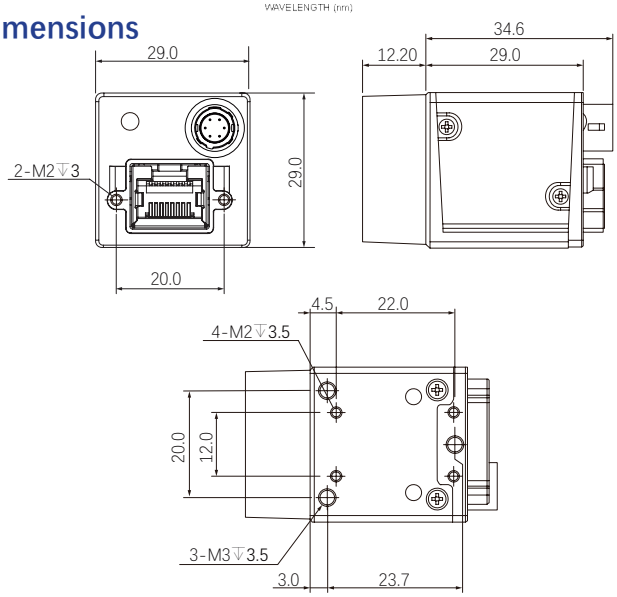

No.8, Xiyuan 9th Road West Lake District, Hangzhou 310030 China
Tel: 86-571-89712238 Web: www.contrastech.com
Email: market@contrastech.com

CONTRASTECH